Cylindrical Roller Radial Bearings/Two-Row | NNU49/750MAW33

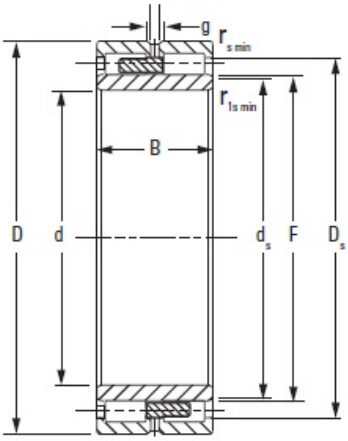

Bearing No. NNU49/750MAW33

Weight	16
Chamfer r_{smin}	250.000 mm9.8425 in
Static Load Rating C_o	1252.200 lb
Dynamic Load Rating C_1 [1]	200 rpm
Width B	190 rpm
O.D. D	16480 kN3700000 lbf
DUR/DOR F/E	1000.000 mm39.3701 in
Bore d	9.5 mm0.37 in
Backing Shaft Diameter d_s	19.3 mm0.76 in
Backing Housing Diameter D_s	0.4420
Type	6230 kN1400000 lbf
Number of Lubrication Holes	831.000 mm32.7165 in
Lubrication Hole Diameter h	7.60 mm0.300 in