Cylindrical Roller Radial Bearings/Two-Row | NNU4096MAW33

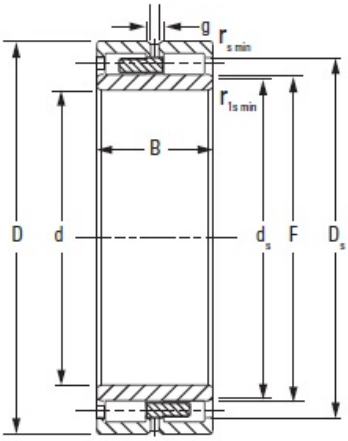

Bearing No. NNU4096MAW33

Weight	12
Chamfer r_{smin}	218.000 mm8.5827 in
Static Load Rating C_o	606.000 lb
Dynamic Load Rating C_1 [1]	350 rpm
Width B	330 rpm
O.D. D	9730 kN2189000 lbf
DUR/DOR F/E	700.000 mm27.5591 in
Bore d	9.5 mm0.37 in
Backing Shaft Diameter d_s	19.3 mm0.76 in
Backing Housing Diameter D_s	0.3130
Type	5090 kN1150000 lbf
Number of Lubrication Holes	533.000 mm20.9843 in
Lubrication Hole Diameter h	8.70 mm0.340 in