Cylindrical Roller Radial Bearings/Two-Row | NNU49/500MAW33

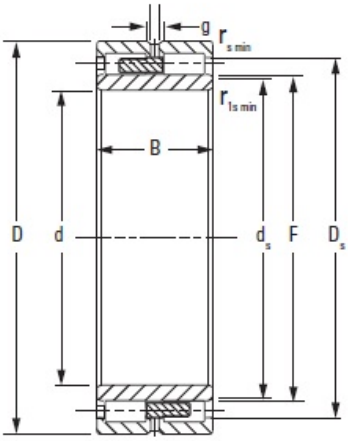

Bearing No. NNU49/500MAW33

Weight	12
Chamfer r_{smin}	170.000 mm6.6929 in
Static Load Rating C_o	375.0 lb
Dynamic Load Rating C_1 [1]	420 rpm
Width B	380 rpm
O.D. D	6280 kN1410000 lbf
DUR/DOR F/E	670.000 mm26.3780 in
Bore d	9.5 mm0.37 in
Backing Shaft Diameter d_s	19.3 mm0.76 in
Backing Housing Diameter D_s	0.3060
Type	2690 kN605000 lbf
Number of Lubrication Holes	554.000 mm21.8110 in
Lubrication Hole Diameter h	6.40 mm0.250 in